REAR AXLE

Note, one or more warnings are present in this procedure

1. WHEEL ALIGNMENT: MEANING OF SYMBOLS

CAUTION

- Symbols used by RENAULT:
  - toe-out: -
  - toe-in: +

2. WHEEL ALIGNMENT

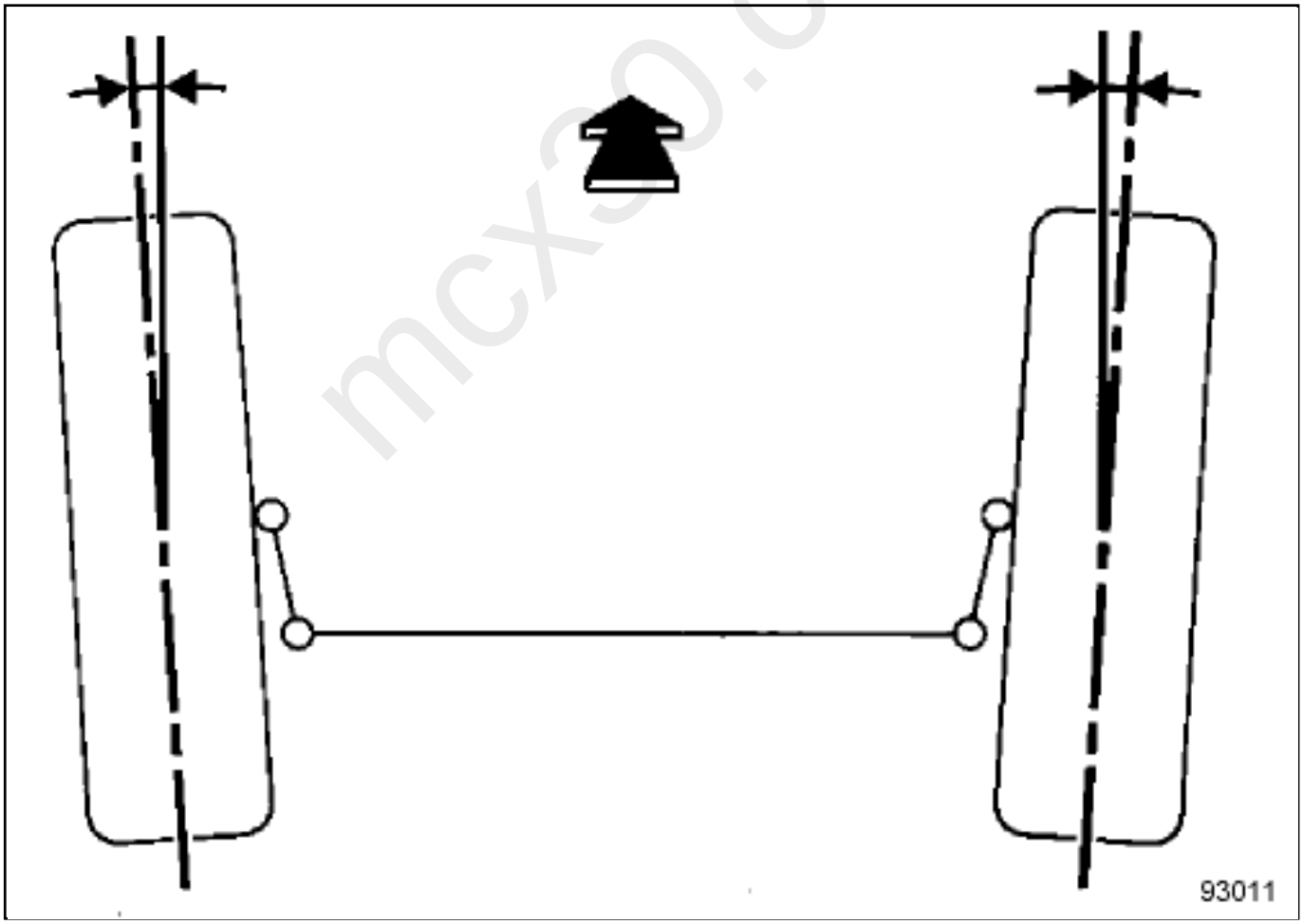

mcx30.com

Value	Position of vehicle
-0˚25' ± 15'	Vehicle in running order

3. CAMBER

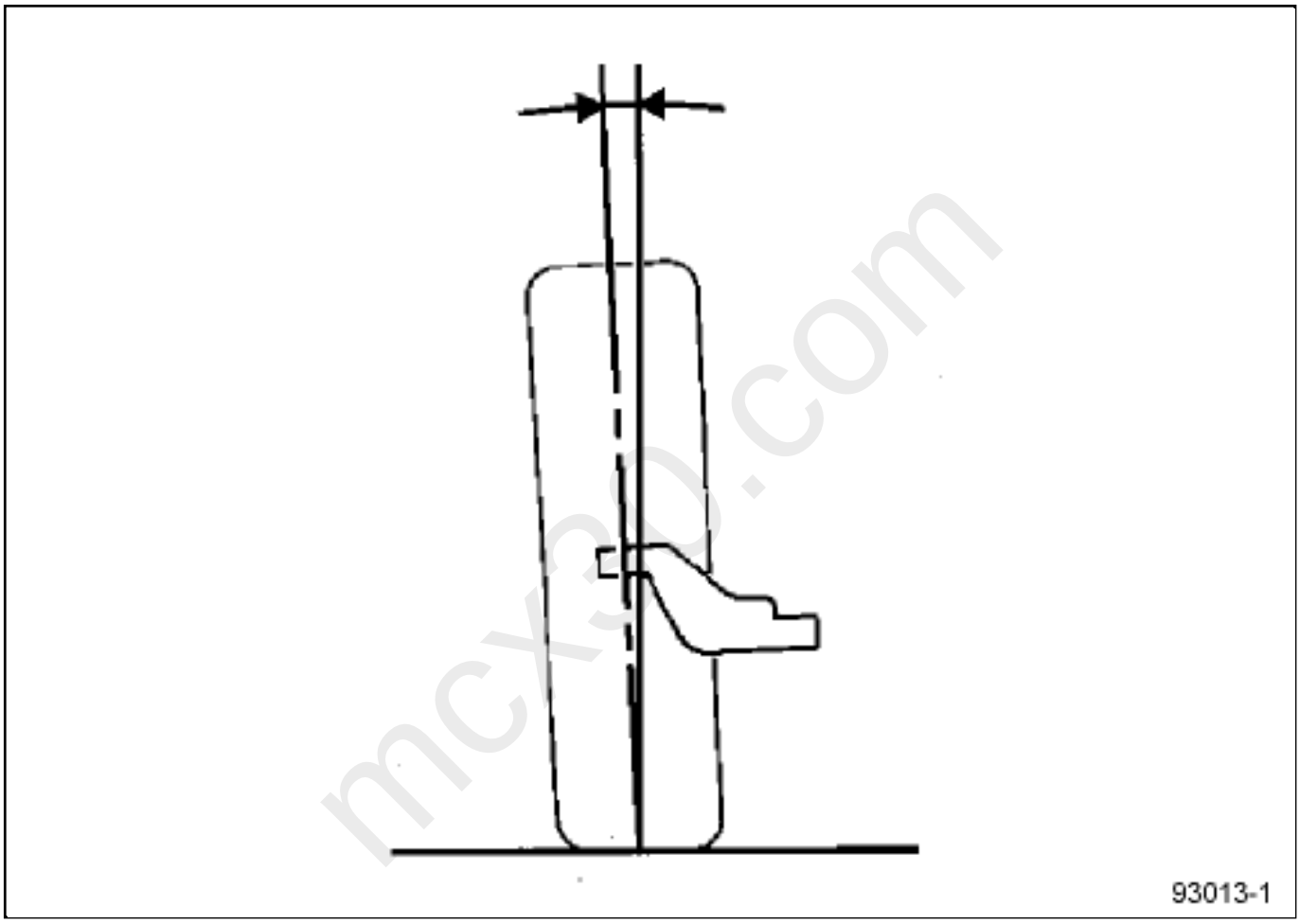

Value	Position of vehicle
-0˚66' ± 20'	Vehicle in running order

mcx30.com